TRENCH SHORING – MINIMUM REQUIREMENTS (**)

DEPTH OF TRENCH	KIND OR CONDITION OF EARTH	SIZE AND SPACING OF MEMBERS										
		UPRIGHTS		STRINGERS		CROSS BRACES[1]						
						WIDTH OF TRENCH					MAXIMUM SPACING	
		MINIMUM DIMENSIONS	MAXIMUM SPACING	MINIMUM DIMENSIONS	MAXIMUM SPACING	UP TO 3 FEET	3 TO 6 FEET	6 TO 9 FEET	9 TO 12 FEET	12 TO 15 FEET	VERTICAL	HORIZONTAL
FEET	TYPE	INCHES	FEET	INCHES	FEET	INCHES	INCHES	INCHES	INCHES	INCHES	FEET	FEET
5 TO 10	(A) HARD, COMPACT	3x4 OR 2x6	6			2x6	4x4	4x6	6x6	6x8	4	6
	(B) LIKELY TO CRACK	3x4 OR 2x6	3	4x6	4	2x6	4x4	4x6	6x6	6x8	4	6
	(C) SOFT, SANDY, OR FILLED	3x4 OR 2x6	CLOSE SHEETING	4x6	4	4x4	4x6	6x6	6x8	8x8	4	6
	(D) HYDROSTATIC PRESSURE	3x4 OR 2x6	CLOSE SHEETING	6x8	4	4x4	4x6	6x6	6x8	8x8	4	6
10 TO 15	(A) HARD, COMPACT	3x4 OR 2x6	4	4x6	4	4x4	4x6	6x6	6x8	8x8	4	6
	(B) LIKELY TO CRACK	3x4 OR 2x6	2	4x6	4	4x4	4x6	6x6	6x8	8x8		6
	(C) SOFT, SANDY, OR FILLED	3x4 OR 2x6	CLOSE SHEETING	4x6	4	4x6	6x6	6x8	8x8	8x10	4	6
	(D) HYDROSTATIC PRESSURE	3x6	CLOSE SHEETING	8x10	4	4x6	6x6	6x8	8x8	8x10	4	6
15 TO 20	(E) ALL KINDS OF CONDITIONS	3x6	CLOSE SHEETING	4x12	4	4x12	6x8	8x8	8x10	10x10	4	6
OVER 20	(E) ALL KINDS OF CONDITIONS	3x6	CLOSE SHEETING	6x8	4	4x12	8x8	8x10	10x10	10x12	4	6

1. TRENCH JACKS MAY BE USED IN LIEU OF, OR IN COMBINATION WITH, CROSS BRACES. SHORING IS NOT REQUIRED IN SOLID ROCK, HARD SHALE, OR HARD SLAG AD DETERMINED BY GEOTECHNICAL ENGINEER. WHERE DESIRABLE, STEEL SHEET PILING AND BRACING OG EQUAL STRENGTH MAY BE SUBSTITUTED FOR WOOD.

( ) DESIGNATION FOR PROPOSAL (BID) PURPOSES

(* *) FROM OSHA SAFETY AND HEALTH REGULATIONS PART 1926, SUBPART P.

2. SIZE OF TIMBER MEMBERS ARE ROUGH CUT TIMBER DIMENSIONS (FULL SIZE)

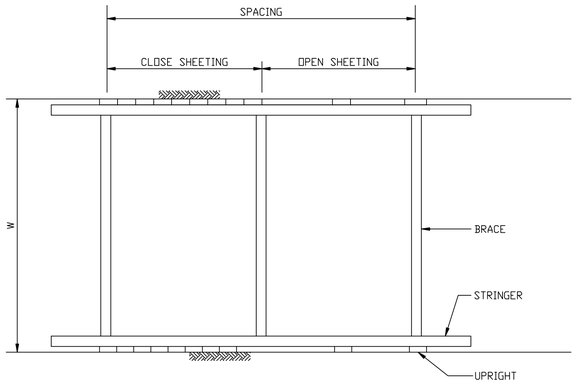

PLAN

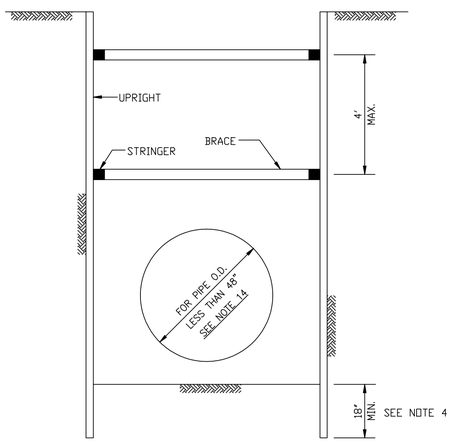

TIMBER TRENCH SHORING

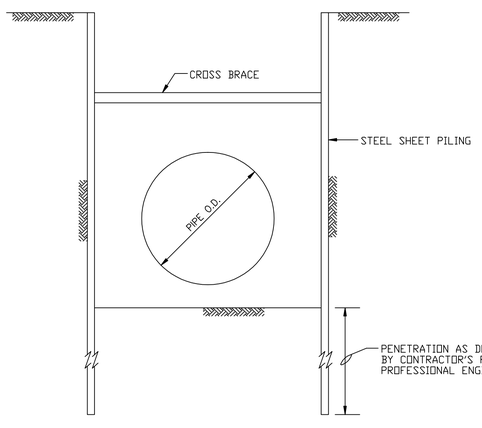

STEEL PILING *

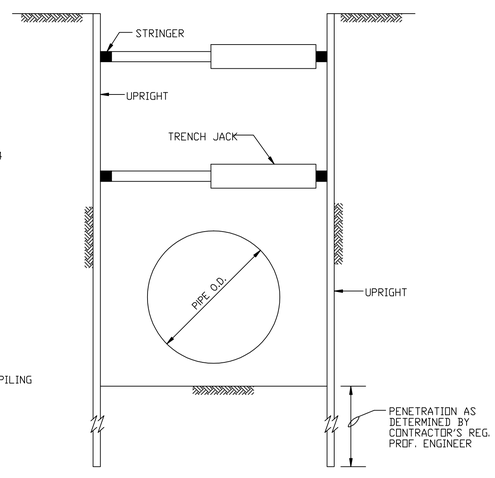

TRENCH JACK AND STRINGER *

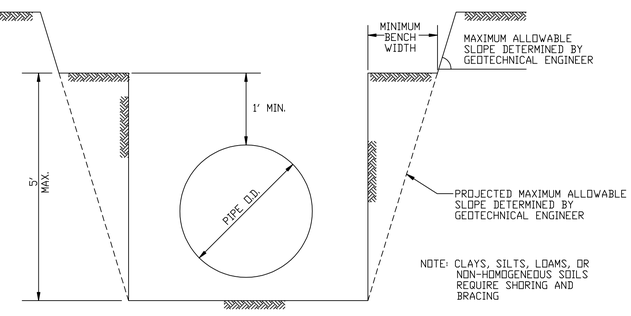

UNSHORED SLOPED TRENCH

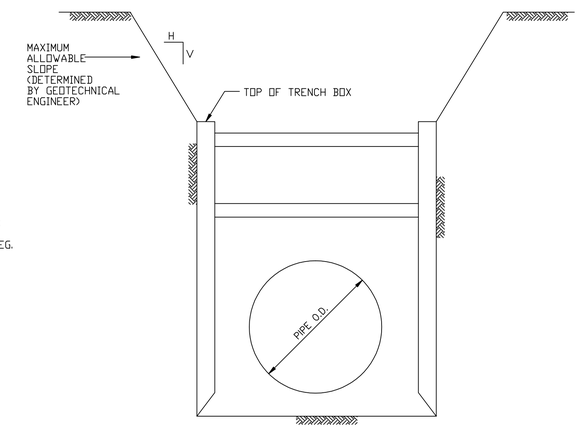

TRENCH BOX *

* ALTERNATE SYSTEM

TRENCH SAFETY SYSTEM DETAILS

N.T.S.

GENERAL NOTES

1. TRENCH SAFETY SYSTEM TO MEET, AS A MINIMUM, THE REQUIREMENTS OF OSHA SAFETY AND HEALTH REGULATIONS PART 1926, SUBPART P AND Q.
2. THE CONTRACTOR MAY ELECT TO USE AN ALTERNATE SYSTEM TO THE TIMBER TRENCH SHORING SHOWN IN THE TABLE. THE ALTERNATE SYSTEM, BE IT A TRENCH BOX, STEEL SHEET PILING, TRENCH JACKS OR A COMBINATION OF THE ABOVE, MUST BE CERTIFIED BY THE CONTRACTOR'S REGISTERED PROFESSIONAL ENGINEER THAT IT PROVIDES EQUAL OR GREATER PROTECTION THAN THE TIMBER TRENCH SHORING SHOWN ON THIS DETAIL SHEET.
3. CONTRACTOR SHALL PERFORM DAILY TRENCH SAFETY SYSTEM INSPECTIONS TO INSURE THAT THE SYSTEM MEETS OSHA REQUIREMENTS AND IS APPROPRIATE FOR SPECIFIC SITE CONDITIONS OF THE OPEN TRENCH. INSPECTIONS ARE REQUIRED AFTER RAINSTORMS OR ANY CHANGE IN CONDITIONS THAT MAY INCREASE THE POSSIBILITY OF A CAVE-IN OR SLIDE.
4. IN THE EVENT THAT TRENCH UPRIGHTS CAN NOT BE PLACED BELOW TRENCH BOTTOM AS SHOWN ON DETAIL, CONTRACTOR MUST PROVIDE ENGINEER WITH PLANS THAT DEMONSTRATE THAT THE UPRIGHTS WILL BE BRACED AND MAINTAINED IN A VERTICAL POSITION.
5. WHERE THE TRENCH SAFETY SYSTEM CROSSES A UTILITY, THE UTILITY LINE MUST BE ADEQUATELY SUPPORTED TO PREVENT ANY DAMAGE. IN ADDITION, IN TRENCHES WITH CLOSED SHEETING, THE UPRIGHTS MUST SURROUND THE UTILITY. OPEN TRENCH SHEETING SPACING MUST BE ADJUSTED AS TO NOT EXCEED THE MAXIMUM ALLOWED SPACING. (NO SEPARATE PAY)
6. TRENCH SHALL BE DRAINED AS REQUIRED SO WORK MAY BE ACCOMPLISHED SAFELY AND EFFICIENTLY. IF NECESSARY, INSTALL DEWATERING SYSTEM TO PROVIDE A DRY TRENCH BOTTOM. DELIVER DISCHARGE FROM SYSTEM TO NATURAL DRAINAGE CHANNEL OR TO STORM DRAINS.
7. IN TRENCHES FOUR FOOT DEEP OR MORE, CONTRACTOR TO PROVIDE ADEQUATE MEANS OF TRENCH EXIT SUCH AS LADDER OR STEPS AND THEY MUST BE LOCATED SO AS TO REQUIRE NO MORE THAN 25 FEET OF LATERAL TRAVEL.
8. MEASURE 'PERMANENT TIMBER TRENCH SHORING' BY LINEAR FOOT OF TRENCH PROTECTED. PAYMENT IS BY STATED SAME LINEAR FEET OF TRENCH PROTECTED EARTH CONDITIONS NOTED IN THE PROPOSAL (BID).
9. STRINGERS AND BRACES TO BE SECURELY FASTENED.
10. TRENCH SHORING SYSTEM HAS BEEN DESIGNED WITH NO ALLOWANCE FOR LIVE LOAD SURCHARGE. IF LIVE LOAD SURCHARGE IS ANTICIPATED IT SHALL NOT BE PLACED WITHIN 2 FEET OF EDGE OF TRENCH AND CONTRACTOR'S REGISTERED PROFESSIONAL ENGINEER SHALL DESIGN TRENCH SHORING SYSTEM TO ACCOMMODATE THE ANTICIPATED LIVE LOAD SURCHARGE.
11. TIMBER SIZES ARE BASED ON STRESSES OF 1650 PSI FOR EXTREME FIBER IN BENDING AND 1450 PSI FOR COMPRESSION PARALLEL WITH GRAIN.
12. EARTH TRENCH CONDITIONS FOR THIS PROJECT ARE ANTICIPATED TO BE AS SHOWN IN THE GEOTECHNICAL REPORT AVAILABLE FROM ENGINEER.
13. TIMBER TRENCH SHORING TABLE SHOWN ON THIS DEATIL SHEET IS GOOD FOR PIPES WITH O.D. OF UP TO 48 INCHES. THE DESIGN ENGINEER SHALL PROVIDE SEPARATE DESIGN FOR PIPE WITH O.D. LARGER THAN 48 INCHES.

16. SLOPES FOR EXCAVATIONS SHALL BE AS FOLLOWS:
    A) SOLID ROCK, SHALE OR CEMENTED SAND & GRAVELS = 90°
    B) COMPACTED ANGULAR GRAVELS = 1/2 : 1
    C) RECOMMENDED SLOPE FOR AVERAGE SOLIDS = 1 : 1
    D) COMPACTED SHARP SAND = 1 1/2 : 1
    E) WELL ROUNDED LOOSE SAND = 2 : 1

16. CLAYS, SILTS, LOAMS OR NON-HOMOGENOUS SOILS REQUIRE SHORING AND BRACING. THE PRESENCE OF GROUND WATER REQUIRES SPECIAL TREATMENT.

CITY OF LA PORTE
PLANNING DEPT.ENGINEERING DIV.
604 W. FAIRMONT PKWY.
LA PORTE. TEXAS, 77571
281-471-5020; FAX: 281-470-5005

DWN: JR
CK'D: RS
APP'D: RS
Scale: N.T.S.
Date: MAY, 2007
Project No.: NONE
SHEET: 1 OF 1

TRENCH SAFETY DETAILS